School of Electronics Engineering
Winter Semester 2022-23
Continuous Assessment Test - I

Programme : B.Tech (ECE)
Course Code : ECE4008 Course Name : COMPUTER COMMUNICATION
Faculty Name : P PRAKASAM
Slot : C1 + TC1 Class ID : VL2022230500952
Date of Exam : 24.01.2023

Max 50 Marks

Q.No	Question	Max Marks	CO	BL
1	i. A computer is moved from one division to another. Does the physical address need to change? Does the IP address need to change? Does it make a difference if the computer is a laptop? The physical address does not change. It is globally unique to the computer's NIC card. The IP address may need to be changed to reflect a new subnetwork id and host id. The situation is the same for laptops. ii. Is the internet a packet switching or circuit switching network? Justify your answer. The Internet is a packet switching network. It does not reserve resources (by establishing physical circuits) before sending data. It uses statistical multiplexing to more efficiently share its resources among users iii. Match the following services to one or more of the seven OSI layers a) Reliable end to end transmission of message TL b) Breaking a transmitted bit stream into frames DL c) Determining which route through a subnet to choose NL d) Frame error and recovery TL/DL e) Electrical and Mechanical Interface PL f) File Management and Transfer AL	2+2+6	CO 1	BL2
2	i. Suppose that sita@source.org wants to send an email to ram@destination.org that is far away from the sender computer. Draw and explain the typical email operation. Explain 5 step process ii. Find the given domain is either generic or country specific or inverse domain. a). xxx.gov.au Country Specific b). yyy.gov.in Country Specific c). 132.128.10.11 Inverse Domain d). zzz.int Generic Domain e). 192.145.129.255 Inverse Domain f). yyy.edu Generic Domain	7+3	CO 7	BL3
3	Compute and draw the spanning tree and label the root switch, root ports, designated ports and block ports for the following switched LAN. Assume that LANs 1, 4, 6, 10 and 11 are Gigabit Ethernets (Cost=15) and the rest are Fast Ethernets (Cost=19). Switches are labeled with S1, S2, etc. Use the LAN costs to determine the least cost path. Numerical values 1, 2, 3, etc. indicate the port number of each switch. **NOTE 1:** MAC address is represented in hexadecimal form. Table 1 Switch Number: Switch ID (Priority + MAC address) S1: 32786 + AB00 S2: 32785 + A900 S3: 32786 + A700 S4: 32785 + A200 S5: 32786 + A300	10	CO 2	BL6

S6	32785 + A400
S7	32786 + B700
S8	32785 + C000
S9	32786 + DB00

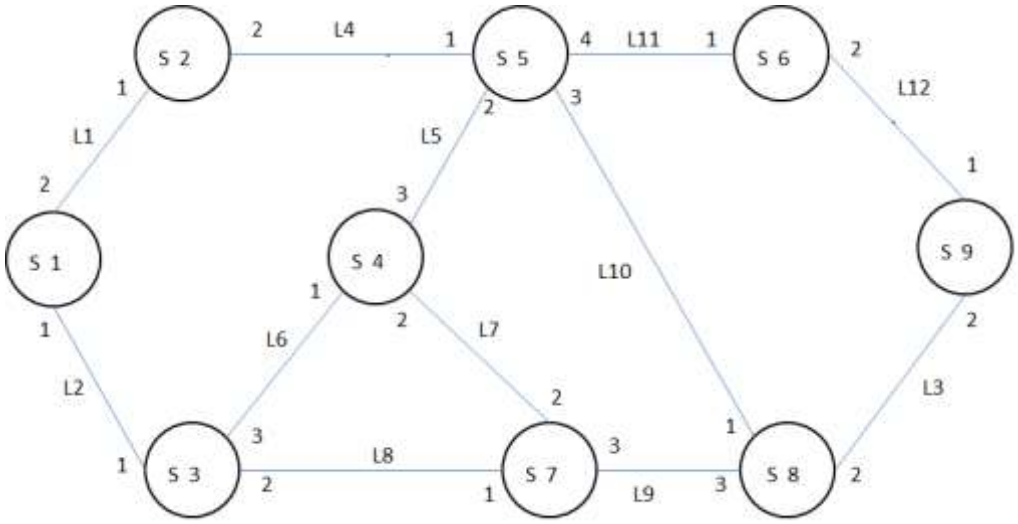

Root Switch : S_4 (2)

Root Ports: (3)

S_1 - 1	S_3 - 3	S_6 - 1	S_8 - 1
S_2 - 2	S_5 - 2	S_7 - 2	S_9 - 1

Designated Switch & Ports (3)

L1 - S_2 1	L5 - S_4 3	L9 - S_7 3
L2 - S_3 1	L6 - S_4 1	L10 - S_5 3
L3 - S_8 2	L7 - S_4 2	L11 - S_5 4
L4 - S_5 1	L8 - S_3 2	L12 - S_6 2

Block Ports (2)

S_1 2, S_7 1, S_8 3, S_9 2

4	Compute and draw the spanning tree and label the root switch, root ports, designated ports and block ports for the following switched LAN. Assume that LANs A, C, E, H, K and M are Gigabit Ethernets (Cost=15) and the rest are Fast Ethernets (Cost=19). Use the LAN costs to determine the least cost path. Numerical values 1, 2, 3, etc. indicate the port number of each switch. NOTE: MAC address is represented in hexadecimal form.	10	CO 2	BL6

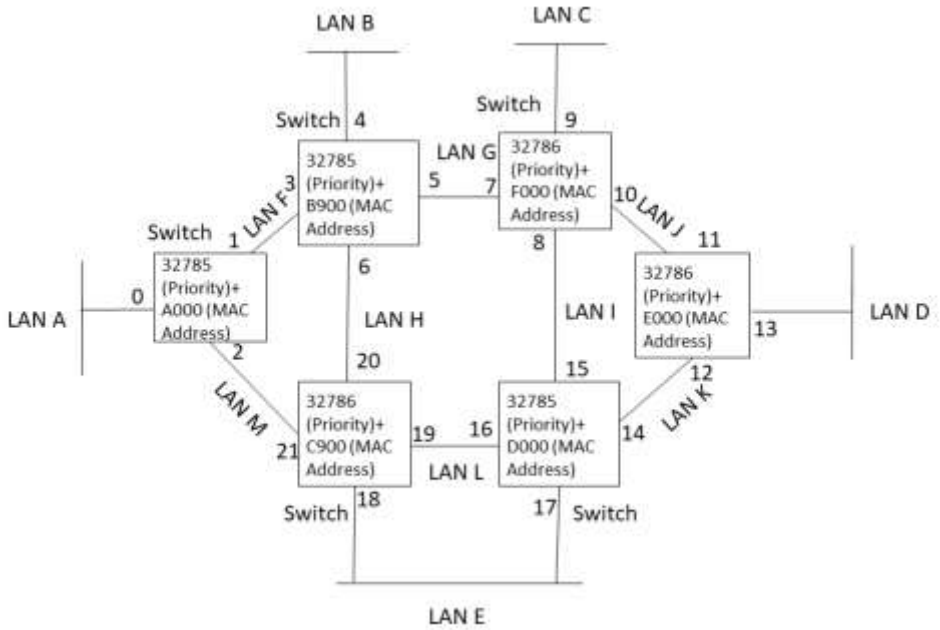

Root Switch: 32785+A000 (2)

Root Ports: (3)

32785+B900 - 3	32785+D000 - 16
32786+C900 - 21	32786+E000 - 12
32786+F000 - 7	

Designated Bridge & Port (3)

LAN A - 32785A000 - 0	LAN E - 32786C900 - 18	LAN I -	15
LAN B - 32785B900 - 4	LAN F 32786F000 - 1	LAN J -	10
LAN C - 32786F000 - 9	LAN G -	5	LAN K - 14
LAN D - 32786E000 - 13	LAN H -	20	LAN L - 19
			LAN M - 2

Block Ports: - (2)

6, 8, 11, 17

5	i. Determine, which of the following is a FQDN and which is a PQDN? a) mil. FQDN b) edu. FQDN c) xxx.yyy.net FQDN d) xxx.yyy.zzz.in PQDN e) yyy.xxx. FQDN f) www.abc.edu PQDN	3	CO 7	BL3

	ii. Six stations (S1-S6) are connected to an extended LAN through transparent bridges (B1 and B2), as shown in Figure. Initially, the forwarding tables are empty. Suppose the following stations transmit frames: S1 transmits to S5, S6 transmits to S1, S2 transmits to S5, S3 transmits to S4, and S5 transmits to S3. Fill in the forwarding tables with appropriate entries after the frames have been completely transmitted**.**	7	CO 2	BL3

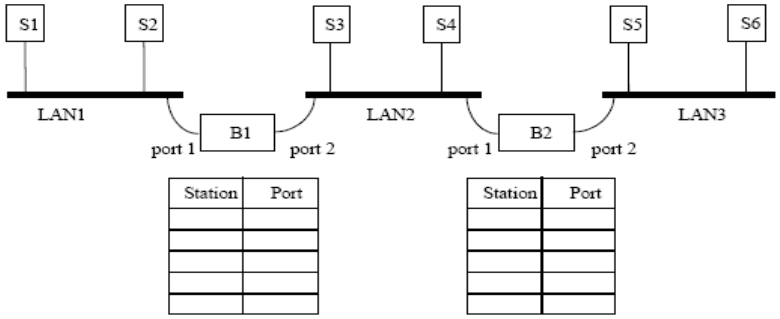

B1		B2	
S1	1	S1	1
S6	2	S6	2
S2	1	S2	1
S3	2	S3	1
Discard		S5	2